A Physics-Informed and Score-Based Diffusion Approach for Enhanced AC-OPF Solving

Bozhen Jiang, and Qin Wang, *Senior Member, IEEE*

***Abstract*—The AC optimal power flow (AC-OPF) problem is fundamental to ensuring the economic and secure operation of power systems. Recently, artificial neural network (ANN)-based end-to-end methods have emerged as a promising approach for AC-OPF, capable of learning the mapping from load inputs to optimal generation solutions within milliseconds. However, existing electricity markets generally operate within a 5-minute decision cycle, which allows for a certain computational time window. In this paper, we propose a physics-informed denoising diffusion probabilistic model (PIDDPM) for AC-OPF, which decomposes the solution process into multiple steps and iteratively refines the solution toward the optimum. As a result, PIDDPM achieves improved solution accuracy with a modest and acceptable increase in computational time. Experiments on the IEEE 118-bus system confirm the practicality of our method, demonstrating that PIDDPM delivers enhanced performance comparable to state-of-the-art approaches while obtaining solutions on the order of seconds. Our code is available at https://github.com/BozhenJIANG/PIDPPM-for-ACOPF.**

***Index Terms*—AC optimal power flow, score matching function, diffusion model, physics-informed neural network, direction field.**

I. Introduction

ALTERNATING current optimal power flow (AC-OPF) problem plays a crucial role in the economic and safe operation of power systems. Traditionally, nonlinear optimization methods, such as interior point optimization techniques (IPOPT), have been reliable in solving AC-OPF problems. These conventional methods, while robust, often require substantial computational costs in real-time application.

In recent years, end-to-end AC-OPF solving methods based on artificial neural networks (ANNs) have attracted significant research interest [1]. These approaches learn the mapping from load profiles to AC-OPF solutions and, once adequately trained, can rapidly and directly produce optimized AC-OPF results under given load conditions within milliseconds [2]. To enhance the generalizability and physical consistency of these methods, studies such as [3], [4] have further incorporated physical laws and operational constraints directly into the learning process. In intra-day rolling dispatch, many electricity markets use a 5-minute decision cycle (15 minutes in some regions) and perform rolling optimization of operational plans for the next several hours. This implies that dispatch decisions allow for a certain computational time window. Therefore, we can relax the pursuit of extreme real-time performance and instead focus on obtaining more accurate and reliable solutions within a limited time frame.

Therefore, we propose a physics-informed denoising diffusion probabilistic model (PIDDPM) for AC-OPF, which achieves improved solution accuracy with a modest and acceptable increase in computational time. The key contributions of this work are fourfold: (i) introducing a novel sequential architecture that integrates a noise prediction network with an AC-PF evaluation network; (ii) formulating a physics-informed denoising loss that jointly incorporates generation cost, equality constraints, and inequality constraints; (iii) developing an accelerated sampling strategy that enables near-real-time solution generation; and (iv) providing theoretical analysis that establishes the equivalence of the proposed method to the original AC-OPF formulation and proves its convergence to constraint-satisfying solutions. The remainder of this paper is organized as follows: Section II presents AC-OPF problem. Section III present the proposed physic-informed denoising diffusion framework. Section IV presents and discusses the experimental results that validate the effectiveness of the PIDDPM method. Finally, Section V concludes.

II. Problem Statement

The AC-OPF is mathematically formulated as a large-scale nonlinear optimization problem. It aims to minimize the total generation cost $\min \sum_{i\in\mathcal{G}} C_i(P_{Gi})$ while satisfying the physical laws of the power grid and operational security constraints, which are defined as follows [1]:

$$\begin{aligned}
&P_{Gi} - P_{Di} = V_i \sum_{j\in\mathcal{N}} V_j (G_{ij}\cos\theta_{ij} + B_{ij}\sin\theta_{ij}), \forall i \in \mathcal{N} \\
&Q_{Gi} - Q_{Di} = V_i \sum_{j\in\mathcal{N}} V_j (G_{ij}\sin\theta_{ij} - B_{ij}\cos\theta_{ij}), \forall i \in \mathcal{N} \\
&P_{Gi}^{\min} \le P_{Gi} \le P_{Gi}^{\max}, \quad Q_{Gi}^{\min} \le Q_{Gi} \le Q_{Gi}^{\max}, \forall i \in \mathcal{G} \\
&V_i^{\min} \le V_i \le V_i^{\max}, \forall i \in \mathcal{N}, \quad |S_{ij}| \le S_{ij}^{\max}, \forall (i,j) \in \mathcal{L}
\end{aligned} \tag{1}$$

where $C_i(\cdot)$ is the cost function of generator i, P_{Gi} and Q_{Gi} represent the active and reactive power of generators, P_{Di} and Q_{Di} denote the active and reactive load, V_i and θ_i are the voltage magnitude and phase angle at bus i, and G_{ij} and B_{ij} are the elements of the admittance matrix [1]. The sets $\mathcal{N}$, $\mathcal{G}$, and $\mathcal{L}$ refer to the collections of all buses, generators, and branches, respectively. Classical AC-OPF solvers iteratively update a candidate solution $\mathbf{x}^{(k)}$ along a search direction $\mathbf{d}^{(k)}$ derived from the Lagrangian $\mathcal{L}(\mathbf{x}, \boldsymbol{\lambda}, \boldsymbol{\nu})$, progressing from an initial guess toward a local optimum that satisfies the KKT conditions, with Lagrange multipliers $\boldsymbol{\lambda}$ and $\boldsymbol{\mu}$ enforcing equality and inequality constraints, respectively. In this work, we aim to let ANN to learn the probabilistic direction field and enhance ANN-based AC-OPF solution accuracy.

III. Physics-informed Denoising Diffusion Framework for AC-OPF Problem

A. Denoising Diffusion Probabilistic Models

The overall process is presented in Fig 1, which include two process, i.e. the noisy process and the denoise process.

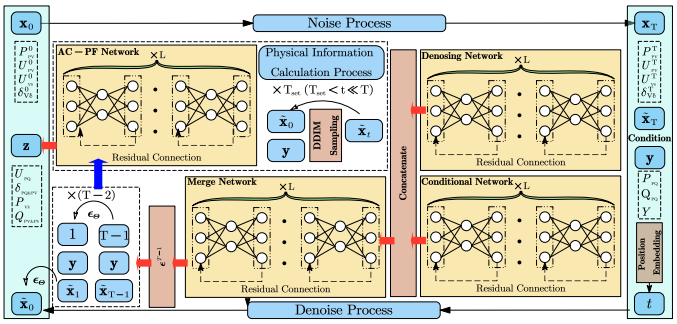

Fig. 1. The Detailed Model Structure.

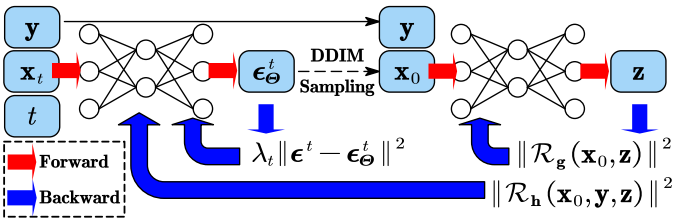

Fig. 2. Overall Process.

The noisy process gradually adds Gaussian noise over T steps to a known AC-OPF optimal solution $\mathbf{x}_0$ from the true data distribution $p_{\text{data}}(\mathbf{x}_0)$, producing a sequence of latent variables $\{\mathbf{x}_1, \mathbf{x}_2, \ldots, \mathbf{x}_T\}$ with increasing noise levels. The transition probability at each step is given by [5]: $q(\mathbf{x}_t|\mathbf{x}_{t-1}) = \mathcal{N}(\mathbf{x}_t; \sqrt{1-\beta_t}\mathbf{x}_{t-1}, \beta_t \mathbf{I})$ where $\{\beta_t \in (0,1)\}_{t=1}^T$ is a predefined noise variance schedule. A key property is that when T is sufficiently large, the distribution of $\mathbf{x}_T$ approximates an isotropic Gaussian distribution $p(\mathbf{x}_T) \approx \mathcal{N}(\mathbf{0}, \mathbf{I})$. This process constructs a degradation path from the complex, unknown feasible solution distribution $p_{\text{data}}(\mathbf{x}_0)$ to a simple, known prior distribution $p(\mathbf{x}_T)$. A crucial advantage is that for a given $\mathbf{x}_0$, a noisy sample $\mathbf{x}_t$ at any time step t can be sampled [5]:

$$\mathbf{x}_t = \sqrt{\bar{\alpha}_t}\mathbf{x}_0 + \sqrt{1-\bar{\alpha}_t}\boldsymbol{\epsilon}, \quad \boldsymbol{\epsilon} \sim \mathcal{N}(\mathbf{0}, \mathbf{I}) \tag{2}$$

where $\alpha_t = 1 - \beta_t$ and $\bar{\alpha}_t = \prod_{s=1}^t \alpha_s$. Then, the denoise process goal is to start from Gaussian prior noise $\mathbf{x}_T \sim \mathcal{N}(\mathbf{0}, \mathbf{I})$ and gradually reconstruct the AC-OPF optimal solution $\mathbf{x}_0$ through a denoising process parameterized by an ANN $\boldsymbol{\epsilon}_{\boldsymbol{\Theta}}$. This process is a reverse Markov chain from $t = T$ to $t = 1$, and its reverse transition probability is approximated by [5] $p_\theta(\mathbf{x}_{t-1}|\mathbf{x}_t) = \mathcal{N}(\mathbf{x}_{t-1}; \boldsymbol{\epsilon}_{\boldsymbol{\Theta}}(\mathbf{x}_t, t), \sigma_t^2 \mathbf{I})$. It means $\mathbf{x}_{t-1}$ is computed from the predicted noise:

$$\mathbf{x}_{t-1} = \frac{1}{\sqrt{\alpha_t}}\left(\mathbf{x}_t - \frac{1-\alpha_t}{\sqrt{1-\bar{\alpha}_t}}\boldsymbol{\epsilon}_{\boldsymbol{\Theta}}(\mathbf{x}_t, t)\right) + \sigma_t \boldsymbol{\epsilon}, \quad \boldsymbol{\epsilon} \sim \mathcal{N}(\mathbf{0}, \mathbf{I}). \tag{3}$$

Intuitively, this denoise process is very similar to the process for classical AC-OPF solvers in Section II. The DDPM is trained using a simplified objective [5]: a noise-prediction network $\boldsymbol{\epsilon}_{\boldsymbol{\Theta}}(\mathbf{x}_t, t)$ learns to predict the noise $\boldsymbol{\epsilon}$ added during the forward process via mean squared error $L_{\text{DDPM}}(\boldsymbol{\Theta}) = \mathbb{E}_{t,\mathbf{x}_0,\boldsymbol{\epsilon}}\left[\left\|\boldsymbol{\epsilon} - \boldsymbol{\epsilon}_{\boldsymbol{\Theta}}\left(\sqrt{\bar{\alpha}_t}\,\mathbf{x}_0 + \sqrt{1-\bar{\alpha}_t}\,\boldsymbol{\epsilon},\, t\right)\right\|^2\right]$.

B. The Sequential Architecture Design

Because $\mathbf{h}(\mathbf{x}_0, \mathbf{y}, \mathbf{z})$ merely computes the latent variable $\mathbf{z}$ via AC-PF, enforcing $\mathbf{h} \to 0$ does not directly optimize $p_{\boldsymbol{\Theta}}(\mathbf{x}_0|\mathbf{y})$. We therefore introduce a sequential network shown in FIg. 1: a noise prediction network generates ϵ_t from $\{\mathbf{y}, t\}$ to compute $\mathbf{x}_0$ via (3), which is then fed with $\mathbf{y}$ into an AC-PF evaluation network to obtain $\mathbf{z}$ and the residual $\boldsymbol{\mathcal{R}}(\mathbf{x}_0)$. This creates a direct gradient pathway from the physics-informed loss to $\boldsymbol{\Theta}$, enabling effective loss design and gradient propagation.

C. Physical-Informed Loss Function Design

We adopt an energy-based method (EBM) view to incorporate AC-OPF physics into the diffusion model. Similarly, let the residual vector be [6]: $\boldsymbol{\mathcal{R}}(\mathbf{x}_0) = \begin{bmatrix} \mathbf{g}(\mathbf{x}_0, \mathbf{z}) \\ \mathbf{h}(\mathbf{x}_0, \mathbf{y}, \mathbf{z}) \end{bmatrix}$, where $\mathbf{g}$ and $\mathbf{h}$ denote the inequality and equality constraints in AC-OPF problem, respectively. We define the energy $E(\mathbf{x}_0) = \frac{1}{2\sigma^2}\left\|\mathcal{R}(\mathbf{x}_0)\right\|^2$, which measures how much a sample $\mathbf{x}_0$ violates the physical laws. In an EBM framework, lower energy corresponds to higher probability $p(\mathbf{x}_0) \propto \exp\left(-E(\mathbf{x}_0)\right) = \exp\left(-\frac{1}{2\sigma^2}\|\mathcal{R}(\mathbf{x}_0)\|^2\right)$. Following the prior work [6], we introduce the virtual observation $\hat{\mathbf{r}} = \mathbf{0}$ and assume it is generated from $q_{\mathcal{R}}(\hat{\mathbf{r}} \mid \mathbf{x}_0) = \mathcal{N}\big(\hat{\mathbf{r}}; \mathcal{R}(\mathbf{x}_0), \sigma^2\mathbf{I}\big)$. As $\sigma^2 \to 0$, the probability mass concentrates on $\mathcal{R}(\mathbf{x}_0)$, enforcing the residual equation. The corresponding virtual likelihood is $p_{\boldsymbol{\Theta}}(\hat{\mathbf{r}}) = \int q_{\mathcal{R}}(\hat{\mathbf{r}} \mid \mathbf{x}_0)\, p_{\boldsymbol{\Theta}}(\mathbf{x}_0)\, d\mathbf{x}_0 = \mathbb{E}_{\mathbf{x}_0 \sim p_{\boldsymbol{\Theta}}}[q_{\mathcal{R}}(\hat{\mathbf{r}} \mid \mathbf{x}_0)]$, where $\boldsymbol{\Theta}$ denotes the prior ANN parameters. We maximize the log-likelihood of the virtual observation:

$$\arg\max_{\boldsymbol{\Theta}} \ \mathbb{E}_{\hat{\mathbf{r}}}\left[\log p_{\boldsymbol{\Theta}}(\hat{\mathbf{r}})\right] = \arg\max_{\boldsymbol{\Theta}} \ \mathbb{E}_{\mathbf{x}_0 \sim p_{\boldsymbol{\Theta}}}\left[\log q_{\mathcal{R}}(\hat{\mathbf{r}} = \mathbf{0} \mid \mathbf{x}_0)\right]. \tag{4}$$

Theorem 1: Maximizing the above log-likelihood is equivalent to minimizing the expected squared residual $\arg\min_{\boldsymbol{\Theta}} \mathbb{E}_{\mathbf{x}_0 \sim p_{\boldsymbol{\Theta}}(\mathbf{x}_0)}\left[\frac{1}{2\sigma^2}\|\mathcal{R}(\mathbf{x}_0)\|^2\right]$. Moreover, if $\mathbf{x}_0$ is obtained in (3) and we simply denote $\mathbf{x}_0 = s_{\boldsymbol{\Theta}}(\boldsymbol{\epsilon})$, the gradient $\frac{1}{\sigma^2}\left(\nabla_{\mathbf{x}_0}\mathcal{R}(\mathbf{x}_0)\right)^\top \nabla_{\boldsymbol{\Theta}} s_{\boldsymbol{\Theta}}(\boldsymbol{\epsilon})$ shows that parameter updates are driven to reduce physical residual.

The proof can be found in [7]. Finally, combining the standard DDPM noise-prediction loss with the physics-informed residual term, we obtain the PIDDPM training objective:

$$\mathcal{L}_{\text{total}}(\boldsymbol{\Theta}) = \mathbb{E}_{\mathbf{x}_0,t,\boldsymbol{\epsilon}}[\|\boldsymbol{\epsilon} - \boldsymbol{\epsilon}_{\boldsymbol{\Theta}}(\mathbf{x}_t, t)\|^2 + \lambda\|\mathcal{R}(\mathbf{x}_0^*(\mathbf{x}_t))\|^2], \tag{5}$$

where λ is a regularization coefficient and $\mathbf{x}_0^*(\mathbf{x}_t)$ is the approximate clean solution reconstructed from $\mathbf{x}_t$ using method described in next subsection.

D. Enhanced Sampling Strategy

During training, evaluating the physics-informed residual $\mathcal{R}(\mathbf{x}_0)$ requires a clean estimate $\mathbf{x}_0$ from a noisy state $\mathbf{x}_t$. A full reverse diffusion for each step is prohibitively expensive for AC-OPF. We therefore adopt a deterministic single-step reconstruction $\hat{\mathbf{x}}_0^{(t)} = \left(\mathbf{x}_t - \sqrt{1-\bar{\alpha}_t}\,\boldsymbol{\epsilon}_\theta(\mathbf{x}_t, t)\right)/\sqrt{\bar{\alpha}_t}$. This avoids iterative sampling and improves training efficiency.

Theorem 2: Assume training has converged to a local optimum $\boldsymbol{\Theta}^*$ and the energy E is differentiable with Lipschitz-continuous gradient along the sampling path. Then, along the deterministic single-step trajectory, the reconstruction energy decreases monotonically $E(\mathbf{x}_0^{(t-1)}) \leq E(\mathbf{x}_0^{(t)}), \quad \forall t = T, T-1, \ldots, 1.$

The proof can be found in [7], which guarantees the convergence and feasibility of the accelerated sampling strategy.

E. The Overall Training Process

The training process comprises forward noising with physics-informed loss computation and backward gradient propagation, as illustrated in Fig. 2. In forward process, the PIDDPM takes a clean solution $\mathbf{x}_0$, condition $\mathbf{y}$, diffusion step t, and noisy state $\mathbf{x}_t$. It outputs predicted noise $\boldsymbol{\varepsilon}_\theta(\mathbf{x}_t, \mathbf{y}, t)$. In backward process, parameters are updated by minimizing the noise discrepancy in (5). Meanwhile, the AC-PF evaluation network calculates power flow residuals $\boldsymbol{\mathcal{R}}_{\mathbf{h}}(\mathbf{x}_0, \mathbf{y}, \mathbf{z})$ and inequality constraint violations $\boldsymbol{\mathcal{R}}_{\mathbf{g}}(\mathbf{x}_0, \mathbf{z})$ in (5), contributing physics loss to enforce AC-OPF consistency.

IV. Case Study

A. Data Set

This paper employs PowerModel.jl (PM.jl) [8] to generate AC-OPF data and implements standard 118-bus systems for evaluating the proposed methods. By scaling the loads within these systems at specific ratios like [2], we generate a total of 11,000 sample points for each test system. The dataset is partitioned into two subsets: a training set and a test set. The training set (10,000 points) leverages abundant historical operational data to pre-train both the DPPM-based AC-OPF solver and the AC-PF evaluator networks, ensuring well-initialized weight parameters. The test set (1,000 points) is used for evaluating the method's performance. As the data are already provided in per-unit values, no additional normalization is applied in this study. Two type evaluation metrics are considered: operating cost and constraint violations. The operating cost f_{Cost} is calculated from the generator active power in the AC-OPF solution. Constraint violations include generator active power limits P_{limit}, generator reactive power limits Q_{limit}, line flow limits S_{limit}, and bus voltage limits U_{limit}.

TABLE I
Comprehensive Performance Comparison.

Method	Cost ($)	Constraint Violations			
		P_{limit}	Q_{limit}	U_{limit}	S_{limit}
M1	129627	0.0001	0.1266	0.0006	0.0000
M2	129577	0.0000	0.0134	0.0000	0.0000
DDPM	129629	0.0000	0.0497	0.0000	0.0000
PIDDPM	129689	0.0000	0.0062	0.0000	0.0000
BASE	129540	0.0000	0.0000	0.0000	0.0000

TABLE II
Inferring Times and Accuracy Trade-off.

Inferring Times	Inferring Time	Cost ($)	Constraint Violations			
			P_{limit}	Q_{limit}	U_{limit}	S_{limit}
1000	$\leq$ 10s	129689	0.0000	0.0062	0.0000	0.0000
100	$\leq$ 1s	129492	0.0000	0.0036	0.0000	0.0000
30	$\leq$ 0.1s	129555	0.0000	0.0056	0.0000	0.0000
10	$\leq$ 0.1s	129550	0.0000	0.0077	0.0000	0.0000
5	$\leq$ 0.01s	129573	0.0000	0.0330	0.0000	0.0000

B. Result Analysis

A comprehensive performance comparison is presented in Table I, incorporating multiple state-of-the-art methods to ensure rigorous assessment. PowerModel.jl serves as the reference benchmark, establishing a performance baseline. The supervised method [3] (denoted M1) and the PINN-based method [1] (denoted M2) are taken into comparison. It is worth noting that the PIDDPM results correspond to a diffusion step count of $T = 1000$. The results in Table I demonstrate that the proposed PIDDPM achieves the lowest constraint violations among the learning-based methods, with zero violations in all but the reactive power limit, where it reduces violations by more than half compared to M2. While the cost obtained by PIDDPM is slightly higher than the benchmark, it remains competitive and within acceptable bounds. This indicates that PIDDPM effectively balances solution accuracy and physical feasibility, validating the benefits of the stepwise physical-informed diffusion approach.

C. Inferring Time and Accuracy Trade-off Discussion

To further explore how the number of inference steps affects the performance of PIDPPM, we present a trade-off analysis in Table II. We evaluate the model with fewer inference steps—ranging from 100 down to 5—to assess the impact on both computational speed and solution accuracy. The results show that reducing the number of steps from 100 to 5 significantly decreases inference time, from under 10 seconds to less than 0.1 seconds. However, this gain in speed is accompanied by a slight rise in constraint violations, which still performs well than the end-to-end methods.

V. Conclusion

This article introduces a physics-informed denoising diffusion probabilistic model for solving the AC-OPF problem. Inspired by traditional optimization methods, the proposed approach differs from existing end-to-end AC-OPF solvers by decomposing the solution process into multiple steps and iteratively refining the solution toward the optimum. As a result, the method achieves improved solution accuracy with a modest and acceptable increase in computational cost. Convergence of the proposed method is established from the perspective of the energy-based method. Validation on the 118-bus test system demonstrates the effectiveness of the PIDDPM.

References

[1] W. Huang and *et. al.*, "Unsupervised learning for solving ac optimal power flows: Design, analysis, and experiment," *IEEE Trans. Power Syst.*, vol. 39, no. 6, pp. 7102–7114, 2024.

[2] X. Pan and *et. al.*, "Deepopf: A feasibility-optimized deep neural network approach for ac optimal power flow problems," *IEEE Syst. J.*, vol. 17, no. 1, pp. 673–683, 2023.

[3] W. Huang and *et. al.*, "Deepopf-v: Solving ac-opf problems efficiently," *IEEE Trans. Power Syst.*, vol. 37, no. 1, pp. 800–803, 2022.

[4] M. Mohammadian and *et. al.*, "Gradient-enhanced physics-informed neural networks for power systems operational support," *Electr. Power Syst. Res.*, vol. 223, p. 109551, 2023.

[5] J. Ho and *et. al.*, "Denoising diffusion probabilistic models," *Adv. Neural Inform. Process. Syst.*, vol. 33, pp. 6840–6851, 2020.

[6] J.-H. Bastek, W. Sun, and D. Kochmann, "Physics-informed diffusion models," in *The Thirteenth Int. Conf. Learn. Represent.*, 2025.

[7] B. Jiang, "The paper appendix," https://github.com/BozhenJIANG/PIDPPM-for-ACOPF, 2026, accessed: 2026-3-18.

[8] C. Coffrin, R. Bent, K. Sundar, Y. Ng, and M. Lubin, "Powermodels.jl: An open-source framework for exploring power flow formulations," in *2018 Power Systems Computation Conference*, June 2018, pp. 1–8.